METAL FILM RESISTORS 5%

承認書

(APPROVAL SHEET)

客戶名稱 Client	
品　　名 Description	METAL FILM RESISTORS 5%
規　　格 Specification	
料　　號 Part No	
備　　注 Remark	

核　準 Approval	校　對 Check By	主　辦 Prepared By
林鐵軍	林峰	彭東林

核　準 Approval	校　對 Check By	主　辦 Prepared By

公司章	

公司章	

METAL FILM RESISTORS 5%:

1.GENERAL INSTRUCTION:

1-1. SCOPE

This specification applies to the Metal Film Resistor

1-2 .CLASSIFICATION

Type number is described as follows.

MF	1W	T	56K OHM	J (±5%)
CLASS	**POWER RATING**	**SHAPE**	**NOMINAL RESESTANCE VALUE**	**TOLERANCE**

2.NOMINAL RESISTANCE:

The nominal resistance shall be the resistance marked on the resistor body and identified, as a rule,in units,Ω,KΩ,MΩ.

3.NOMINAL RESISTANCE TOLERANCE.

The nominal resistance tolerance is represented in one capital letter selected from J(±5%), F(±1%),D(±0.5%),C(±0.25%), B(±0.1%)

4.RATING:

CF(CARBON FILM FIXED RESISTORS)

STYLE	MAX WORKING	MAX OVERLOAD	RESISTANCE VALUE RANGE
CF1/6W / CF1/8W	200V	400V	0.1Ω～22MΩ
CF1/4W / CF1/4WS	250V	500V	0.1Ω～22MΩ
CF1/2W / CF1/2WS	350V	700V	0.1Ω～22MΩ
CF1W / CF1WS	500V	1000V	0.1Ω～22MΩ
CF2W / CF2WS	500V	1000V	0.1Ω～22MΩ
CF3W / CF3WS	500V	1000V	0.1Ω～22MΩ
CF5W / CF5WS	500V	1000V	0.1Ω～22MΩ

4-1. POWER RATING

power rating is defined as maximum power rating continuously applied under ambient temperature at 70℃.when the ambient temperature exceeds 70℃,use chart 1.

METAL FILM RESISTORS 5%

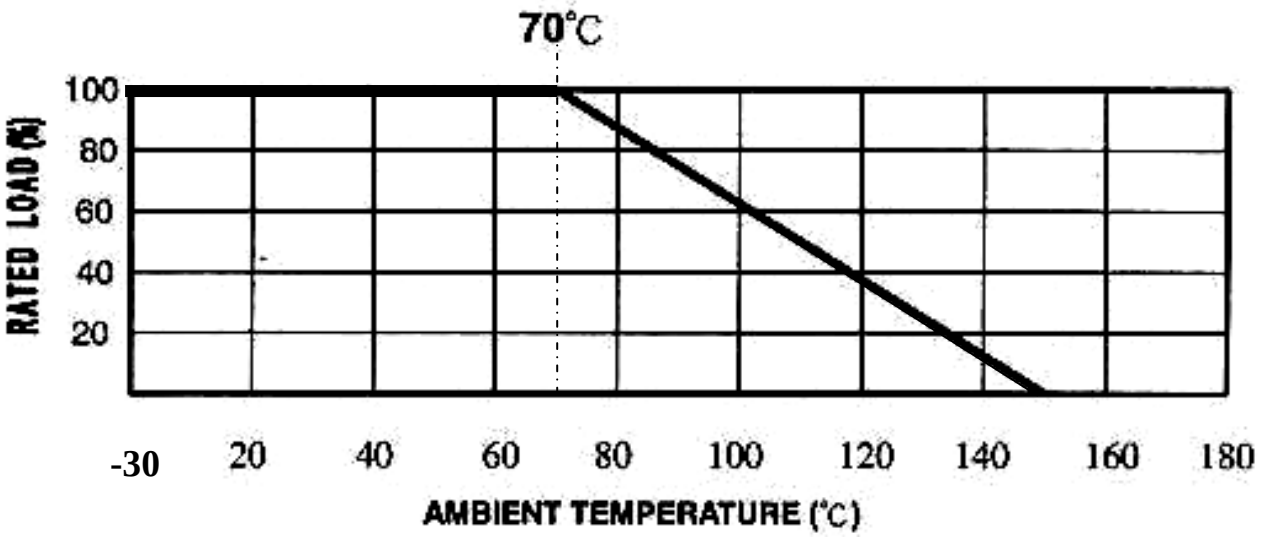

4-2. RATED VOLTAGE

Rated voltage is defined as the DC or (AC effective
Value at commercial frequency example 50 C/S, 60 C/S)
Voltage when rated power is applied and can be calculated
By the following EQUATION $E=\sqrt{P*R}$
E=RATED VOLTAGE
P=RATED POWER (WATTS)
R=NOMINAL RESISTANCE VALUE (OHM)
When the calculated rated voltage exceeds the
Maximum usable voltage flue shown in CHART 1,the
Maximum usable voltage is defined as the voltage
According to the power-decreasing curve shown in CHART1.

ITEM (STANDARD)	PERFORMANCE AND/OR QUALIITY ACCEPTANCE	TEST METHOD
Resistance value Vs Temperature Characteristics	For $R_X \angle 100K\Omega$ +350～-500PPM/℃ $100K\Omega \leqq R_X \leqq 1M\Omega$ 0～-700PPM/℃ $1\ M\Omega \angle R_X$ 0～-1500PPM/℃	JIS-C-5202 5.2 Measure resistance (Ro ohm) at room Temperature(To ℃) Measure again the same at 100℃ Higher than room temperature $PPM = \frac{R - R_O}{R_O} * \frac{10^6}{(T_0+100) - T_0}$
Short time overload	The resistance variation shall be within±(0.75% + 0.05 ohm) and there Shall be no mechanical breakage	JIS-C-5202 5.5 Apply DC voltage 2.5times the rated Voltage for 5 seconds The leave at room temperature for 30 Minutes then measure MAX overload Voltage 0.50W – 700V (DC)

METAL FILM RESISTORS 5%:

ITEM (STANDARD)	PERFORMANCE AND/OR QUALIITY ACCEPTANCE	TEST METHOD
Insulation resistance	1000M ohm or more	JIS-C-5202 5.6 In V-BLOCK Lay the resistor on 90° angle metal V Block apply 100VDC between resistor Lead and V block for one Minute And Measure
Voltage endurance	The resistance variation shall be within±(2% + 0.05ohm) and there shall be no mechanical breakage	JIS-C-5202 5.7 Icy the resistor on the 90° angle metal V Block and apply reamed AC voltage for One Minute. Test voltage 0.25W – 500V (AC) 0.50W –700V(AC)
Intermittent overload	Resistance variation shall be Within ±(2.00% + 0.05ohm)	JIS-C-5202 5.8 Apply AC voltage 4 times the rated voltage for 1 second and rest for 25 seconds and Repeat this cycle for 10000±200times leave resistor 30 minutes at room temperature after test and measure Maximum voltage for intermittent Overload.0.50W-700V(AC)
Terminal strength	Resistance variation shall be within ±(0.5% + 0.05ohm) also there Shall be on mechanical breakage	Pull test: apply 2.5kg force to the lead in the direction of lead axislor30±5 seconds.
Heat resistively Against soldering	Resistance variation shall be within ± (1.0%+0.05ohm) also there Shall be on mechanical breakage	JIS-C-5202 7.10 Dip the lead in to a solder bath having a Temperature of 350℃ ± 10℃ up to 4±0.8mm from the body of the resistor at room temperature 3 hours after ,then Measure
Solder ability	More than 95% of the surface of the lead shall be covered by new solder after the leads are dipped in the Solder	JIS-C-5202 6.5 Dip the lead in to a solder bath having a Temperature of 260℃±5℃ up to 4±0.8mm from the body of the resistor and hold it for 5 ± 0.5seconds then inspect
Humidity load test	Resistance variation be Within ± (3.0% + 0.05ohm) Also there shall be mo mechanical breakage	JIS-C-5202 7.9 In temperature chamber having temperature 40℃±2℃,relative humidity 90 – 95%, Apply rated voltage 1.5hour and shut voltage 0.5 hour repeat this cycle for 1000 hours, leave in room temperature for lhour after test, then measure
Load life test	The variation of the resistance Shall be within ± (3%+0.05ohm) Also there shall be no mechanical Breakage	JIS-C-5202 7.10 In the constant temperature chamber having Temperature70℃ ± 2℃,apply rated Dc voltage for 1.5hour and shut voltage for 0.5 hour and repeat thin cycle for 1000 hours, leave in room temperature lhour after test, then measure

METAL FILM RESISTORS 5%:

5. Marking

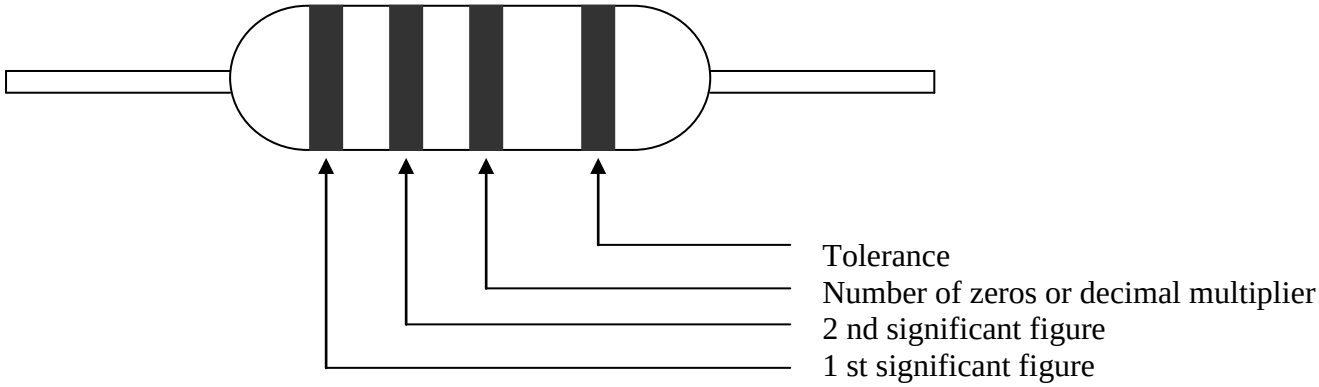

Color refer

Color	1 st Band	2 nd Band	3 rd Band	4 th Band
Black	0	0	10^0	
Brown	1	1	10^1	
Red	2	2	10^2	±2.0%
Orange	3	3	10^3	
Yellow	4	4	10^4	
Green	5	5	10^5	
Blue	6	6	10^6	
Violet	7	7	10^7	
Grey	8	8	10^8	
White	9	9	10^9	
Gold			10^{-1}	±5.0%
Silver			10^{-2}	±10.0%

6. Construction and Dimension

6-1. .Construction

a. Lead Wire .
b. End Cap.
c. Carbon Film
d. Ceramic Rod
e. Epoxy Resin.(Metal film coating)
f. Color Code

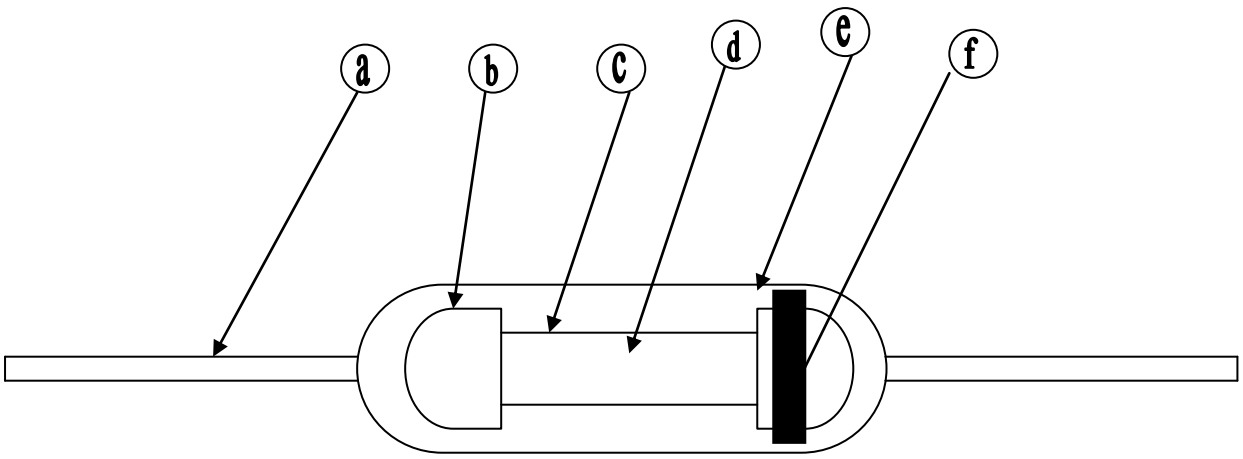

METAL FILM RESISTORS 5%:

6-2 Dimensions

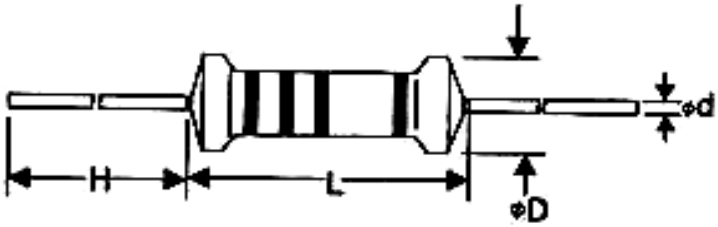

TABLE:

WATTS	L	D	H	d ± 0.05mm
1/6W 1/8W 1/16W	3.2±0.3	1.8±0.3	28±2.0	0.4
1/4WS				
1/4W	6.0±0.5	2.3±0.3	28±2.0	0.45
1/2WS				
1/2W	9.0±0.5	3.2±0.3	26.0±2.0	0.52
1WS				
1W	11.0±1.0	4.2±0.5	25±2.0	0.65
2WS				
1W	11.0±1.0	4.2±0.5	35.0±3.0	0.65
2WS				
2W	15.0±1.0	5.0±0.5	33.0±3.0	0.72
3WS				
3W	17.0±1.0	6.0±0.5	36.0±3.0	0.72
5WS				

7. FORMED DIMENSIONS

7-1. M – TYPE

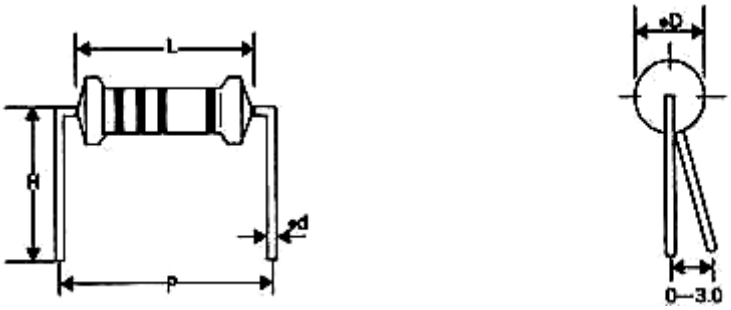

WATTS	DIMENSIONS (mm)				
	L	P±1.0	D	d±0.05	H±1.0
1/6W/1/8W/1/16W /1/4WS	3.3±0.3	6	1.8±0.3	0.40	8.0
1/4W/1/2WS	6.0±0.5	10	2.3±0.3	0.45	8.0
1/2W/1WS	9.0±0.5	12.5/15	3.2±0.3	0.52	8.0
1W/2WS	11.0±1.0	15	4.2±0.5	0.65	10
2W/3WS	15.0±1.0	20	5.0±0.5	0.72	10
3W/5WS	17.0±1.0	25	6.0±0.5	0.72	10

METAL FILM RESISTORS 5%:

7-2 . MB – TYPE

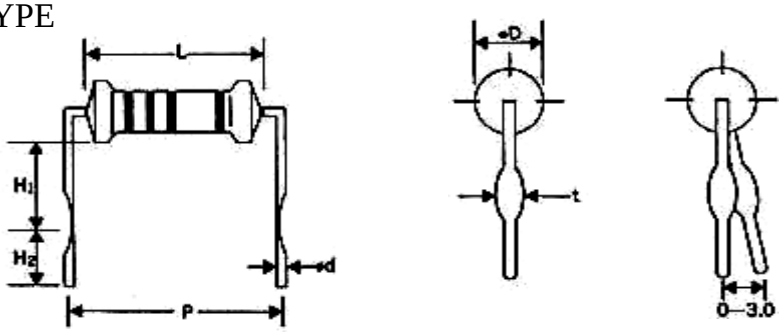

WATTS	DIMENSIONS (mm)						
	L	P±1.0	D	d±0.02	H1±1.0	H2±1.0	t±0.2
1/2W/1WS	9.0±0.5	12.5	3.2±0.3	0.52	10.5	5.0	1.20
1W/2WS	11.0±1.0	15	4.2±0.5	0.65	10.5	5.0	1.25
2W/3WS	15.0±1.0	20	5.0±0.5	0.72	10.5	5.0	1.25
3W/5WS	17.0±1.0	25	6.0±0.5	0.72	10.5	5.0	1.25

7 – 3. F – TYPE

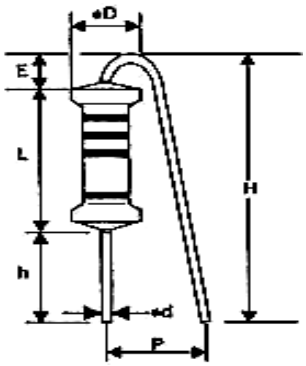

WATTS	DIMENSIONS (mm)						
	L	P±1.0	D	d±0.05	h±1.0	H±1.0	Emax
1/4W/1/2WS	6.0±0.5	6-8	2.3±0.3	0.45	8.0	14	3
1/2W/1WS	9.0±0.5	6-8	3.2±0.3	0.52	8.0	18	3.5
1W/2WS	11.0±1.0	6-8	4.2±0.5	0.65	8.0	20	3.5
2W/3WS	15.0±1.0	6-8	5.0±0.5	0.72	8.0	25	3.5
3W/5WS	17.0±1.0	6-8	6.0±0.5	0.72	8.0	30	3.5

7 – 4. FK2-TYPE,FK1－TYPE AND FKK-TYPE

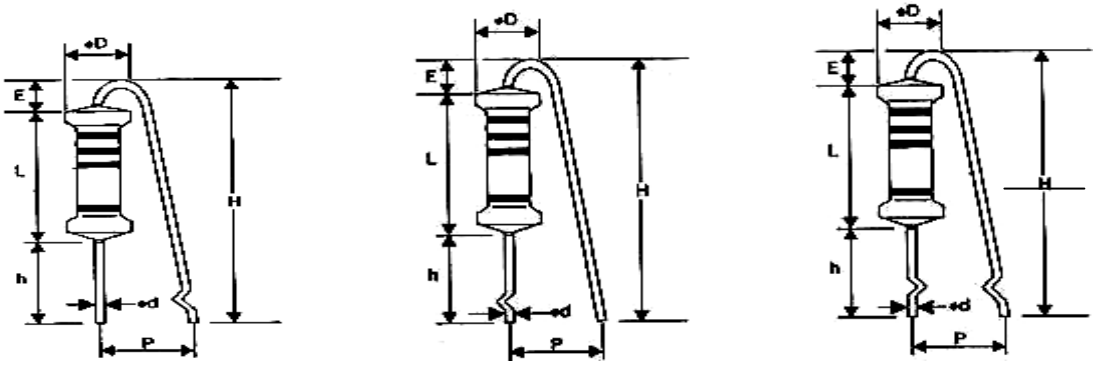

METAL FILM RESISTORS 5%:

WATTS	DIMENSIONS(mm)						
	L	P±1.0	D	d±0.05	h+1/-0	H±1.0	Emax
1/2W/1WS	9.0±0.5	5-7	3.2±0.3	0.52	8	18	3.5
1W/2WS	11.0±1.0	5-9	4.2±0.5	0.65	8	20	3.5
2W/3WS	15.0±1.0	5-9	5.0±0.5	0.72	8	25	3.5
3W5WS	17.0±1.0	5-10	6.0±0.5	0.72	8	30	3.5

8. Taping Dimensions

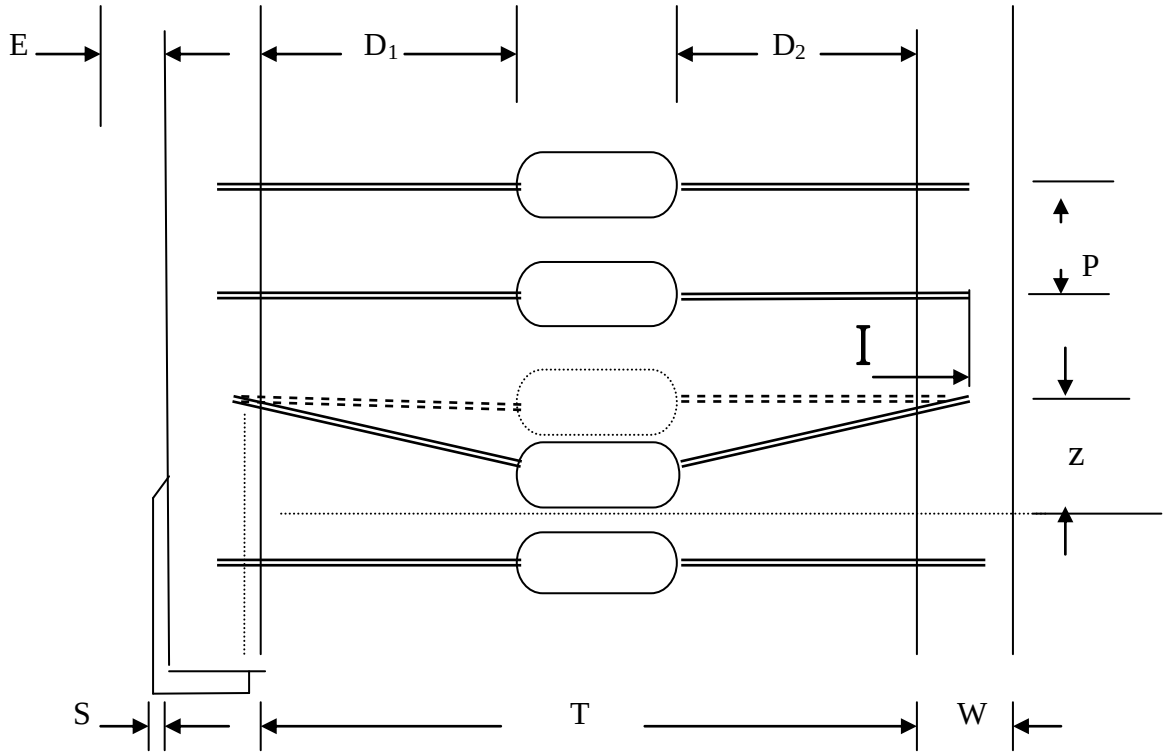

WATTS	Type	T	p±0.5	W±0.5	D1－D2 MAX	E MAX	Z MAX	S MAX	I MAX
1/6W/1/8W 1/16W/1/4WS	T－ 26	26±1.5	5	6	0.8	0	1.2	0.8	3.2
	T－ 52	52±1.5	5	6	0.8	0	1.2	0.8	3.2
1/4W 1/2WS	T－ 26	26±1.5	5	6	0.8	0	1.2	0.8	3.2
	T－ 52	52±1.5	5	6	0.8	0	1.2	0.8	3.2
1/2W/1WS	T－ 52	52±1.5	5	6	0.8	0	1.2	0.8	3.2
1W/2WS 2W	T－ 52	52±1.5	5	6	0.8	0	1.2	0.8	3.2
	T－ 73	73±1.5	5	6	0.8	0	1.4	0.8	3.2
3WS	T－ 73	73±1.5	10	6	0.8	0	1.4	0.8	3.2
3W/5WS	T－ 73	73±1.5	10	6	0.8	0	1.4	0.8	3.2

METAL FILM RESISTORS 5%

9 .PACKING

9 - 1. TAPING TYPE

LABEL SPECIFICATION

1. TYPE
2. WATTS TOLERANCE
3. RESISTANT QUANTITY
4. P/N
5. LOT NO.

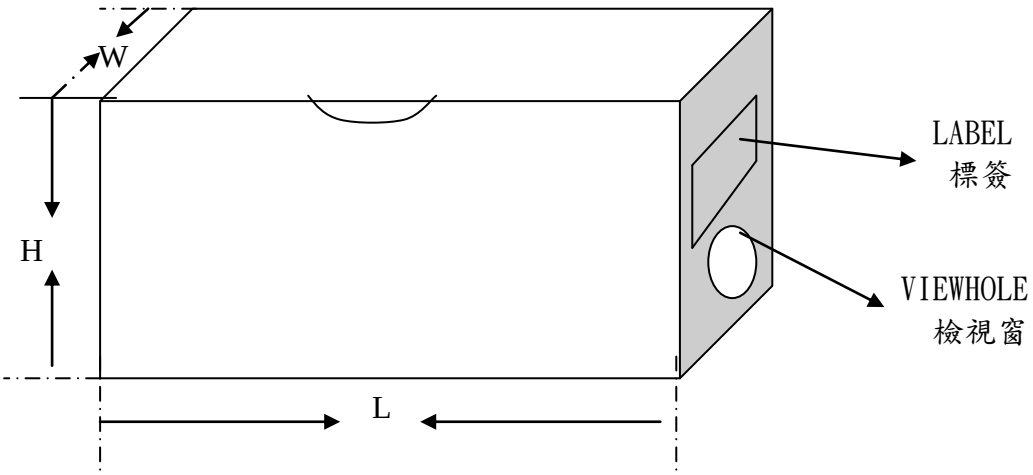

WATTS	W(mm)	H(mm)	L(mm)	Q'TY(pcs)
1/6W 1/8W 1/16W 1/4WS	50	67	260	5000
1/4W/ 1/2WS	50	100	260	5000
1/6W / 1/8W 1/16W 1/4WS	80	72	266	5000
1/4W/ 1/2WS	80	100	260	5000
1/2W/ 1WS	80	85	260	2000
1W/ 2WS	110	80	270	1000
2WS/ 3WS	110	92	270	1000
3W/5WS	110	92	270	700

METAL FILM RESISTORS 5%

9 – 2. BULK

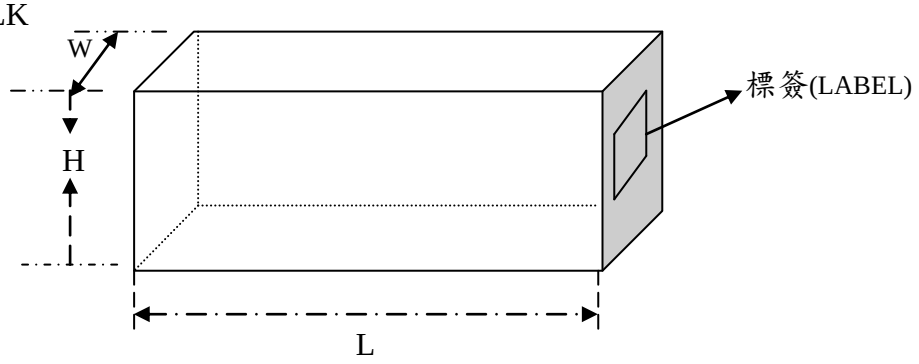

WATTS		TYPE	L(mm)	W(mm)	H(mm)	POLY BOG	BOX(pcs)
1/6W 1/8W	1/16W 1/4WS	P	240	140	76	1000	20000
1/4W	1/2WS	P	240	140	76	500	10000
1/2W	1WS	P	240	140	76	500	5000
1W	2WS	P	240	140	76	200	2000
2W	3WS	P	240	140	76	100	1500
3W/5WS		P	240	140	76	100	1000